DAVIN

Typ D

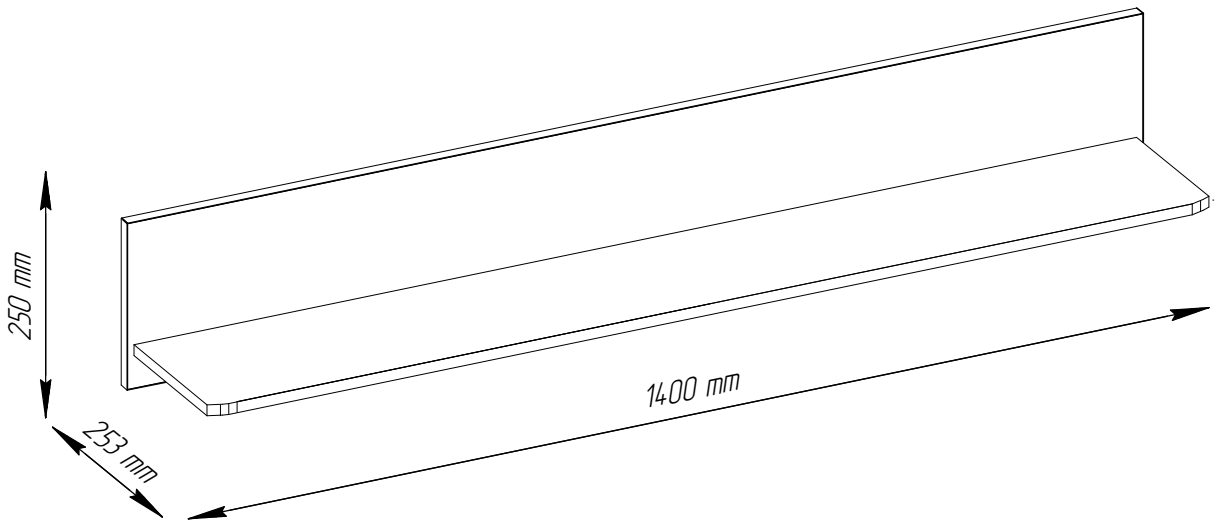

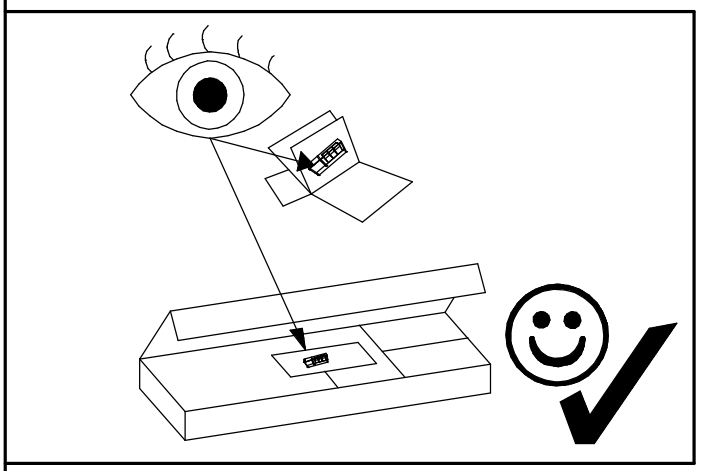

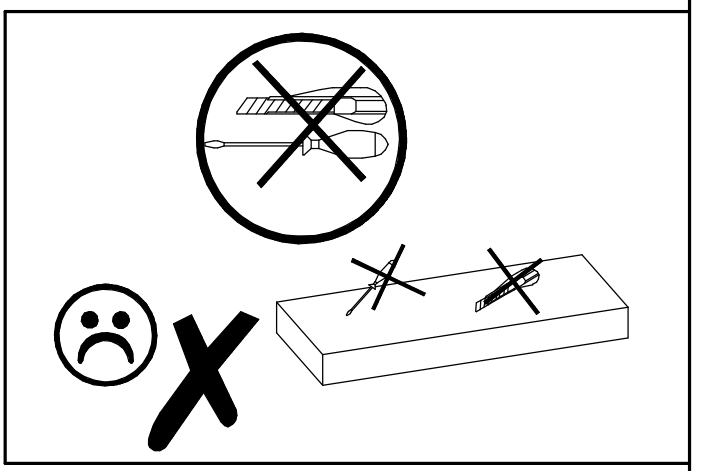

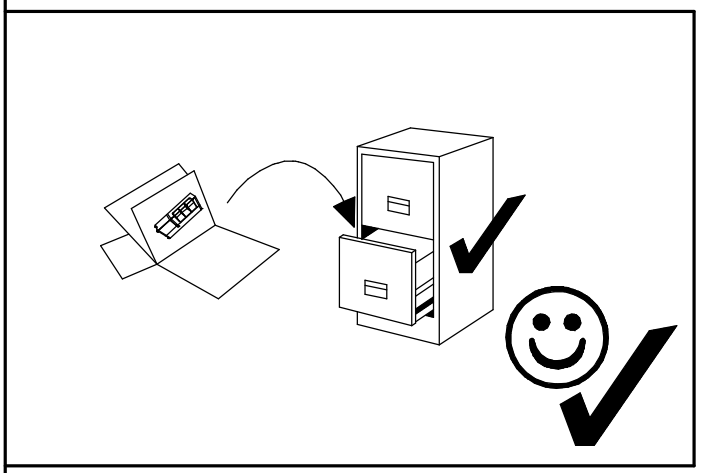

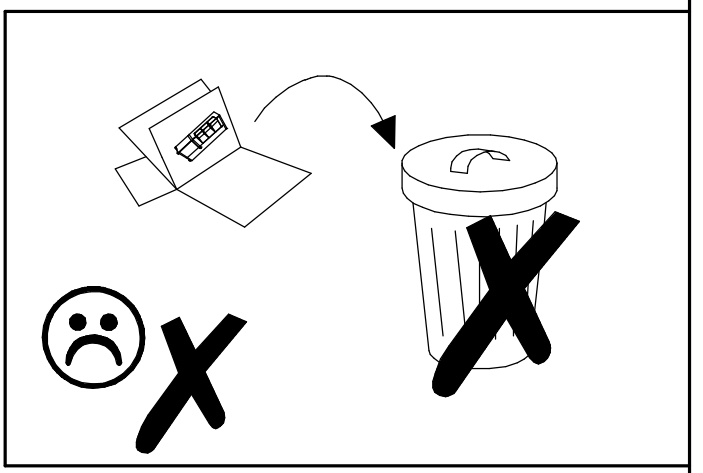

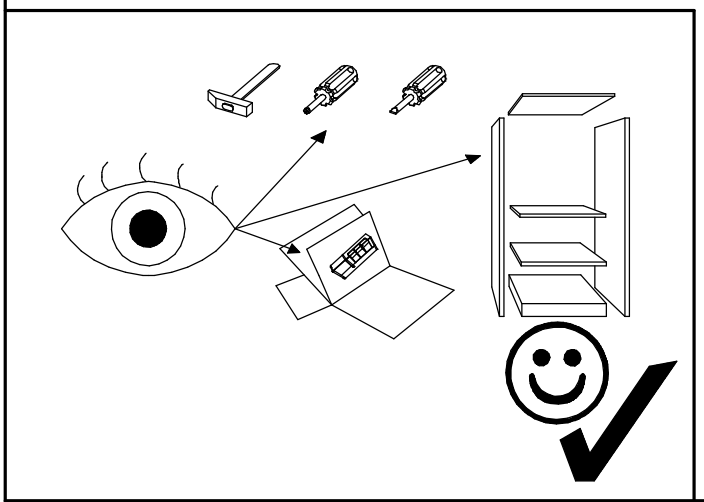

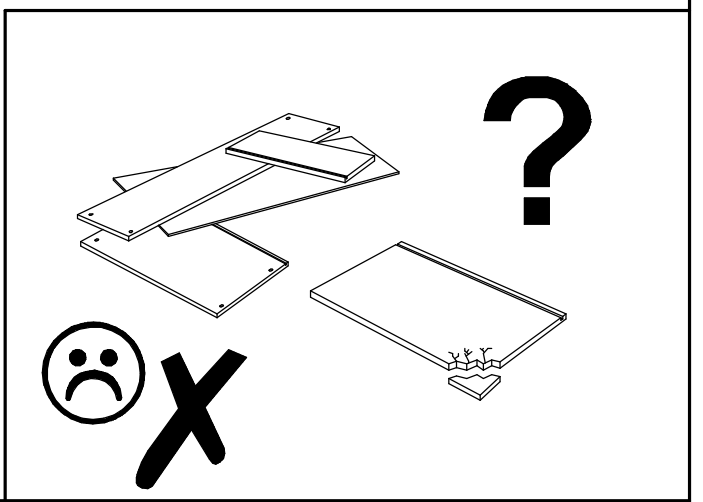

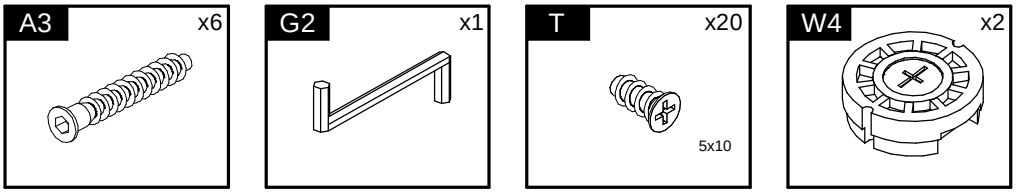

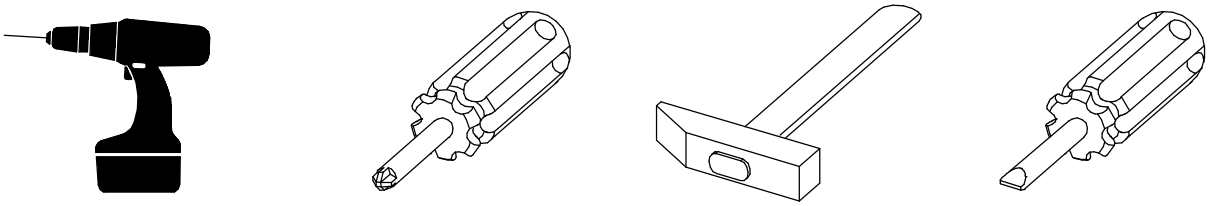

Element symbol	Measurements				Code	Paket
1	1400	250	22	1	1002	1/1
2	1380	231	22	1	1003	1/1

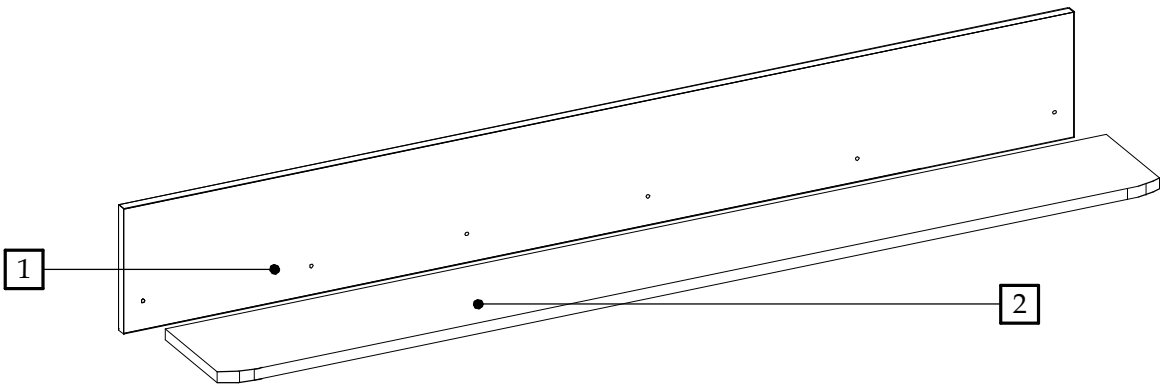

1

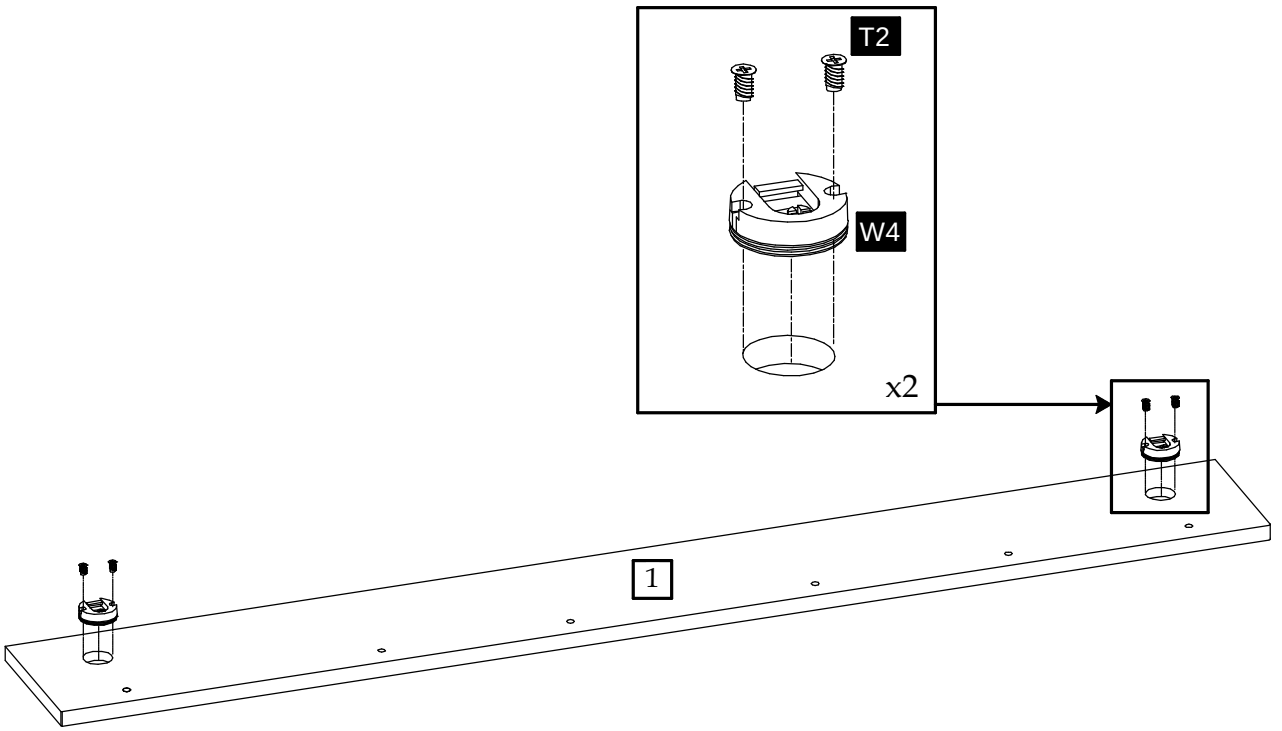

2

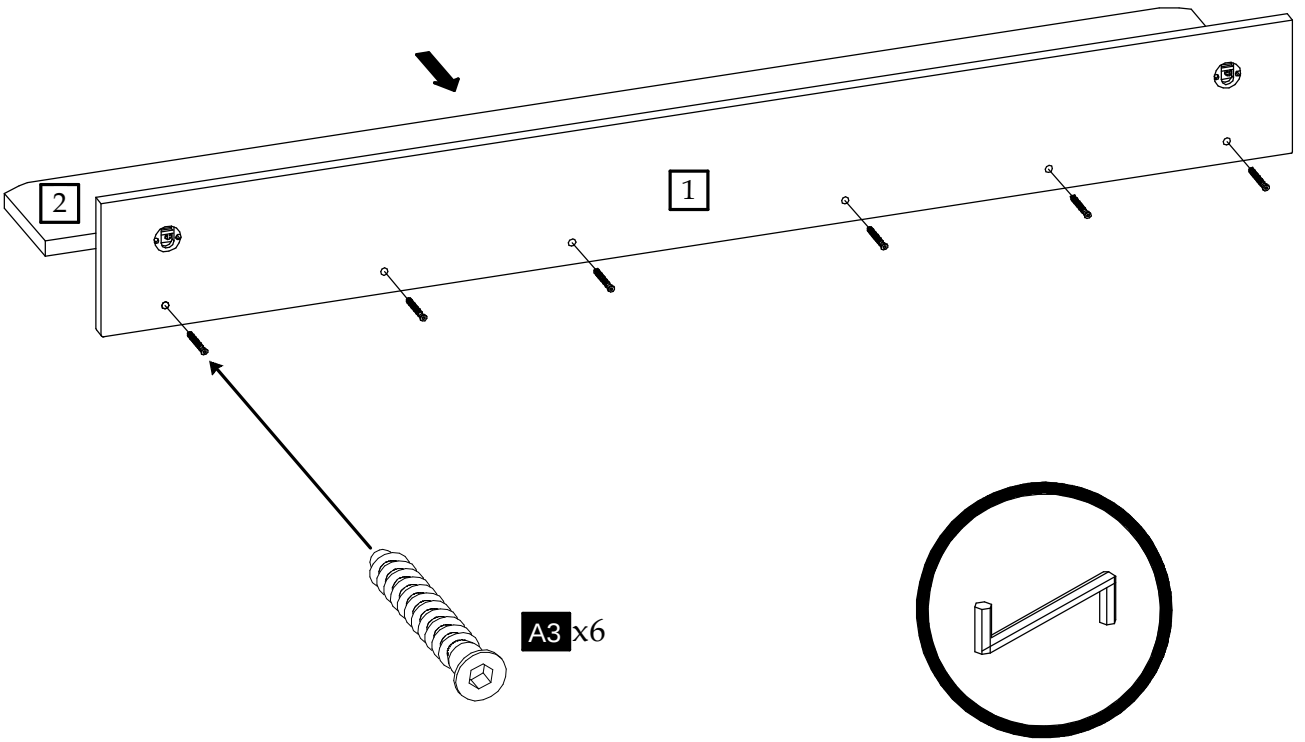

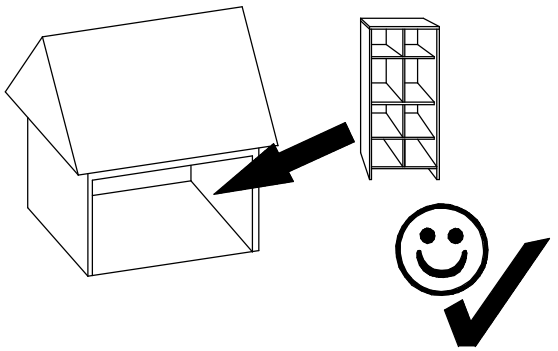

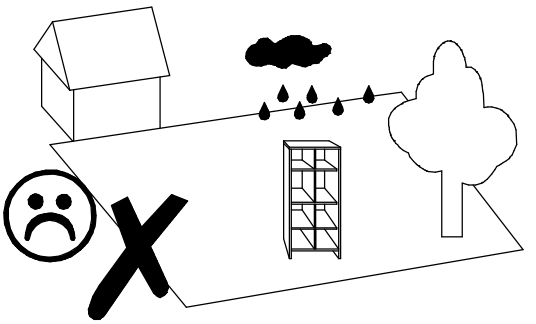

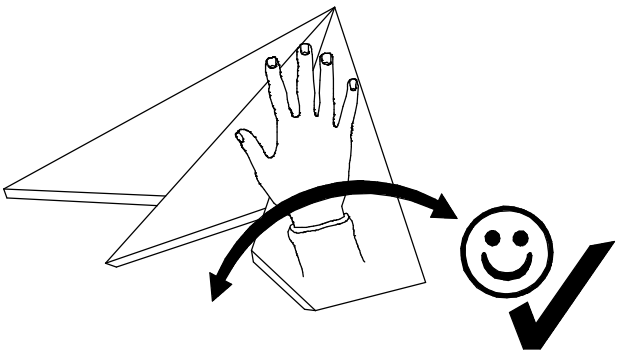

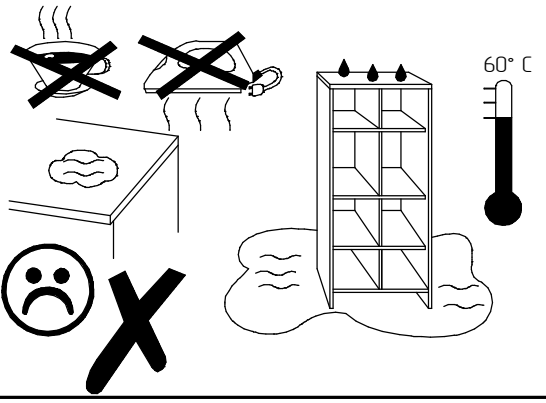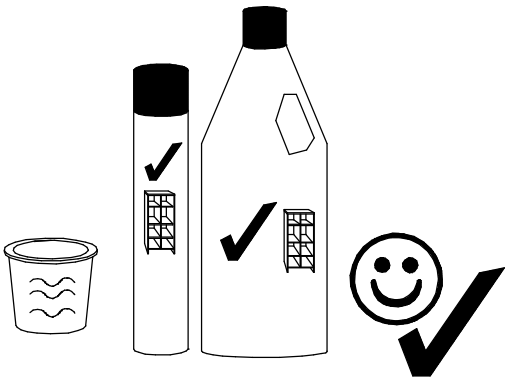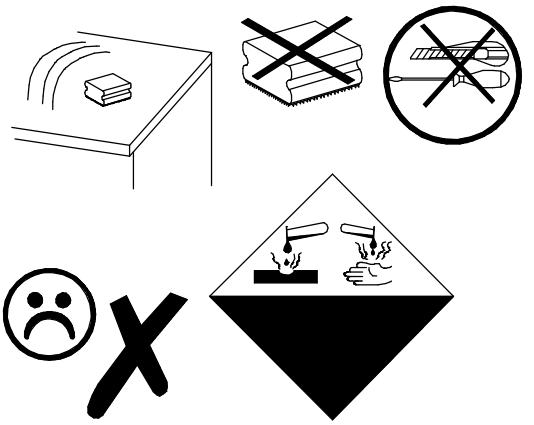
60° C