C2

ST3. 5X30mm
4pcs

D

M4X12mm
5pcs

E

4pcs

F

ST5X50mm
17pcs

G

8X30mm
20pcs

7

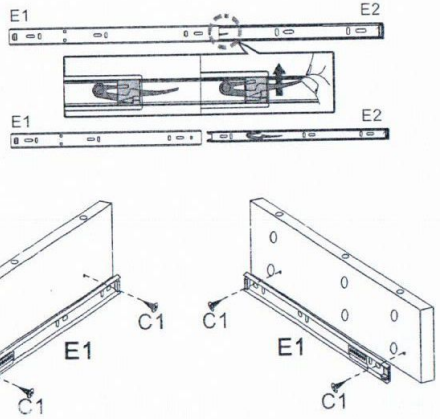

8

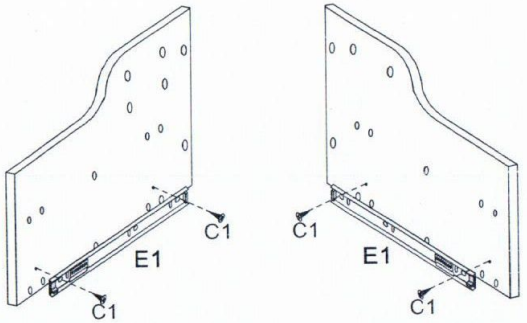

9

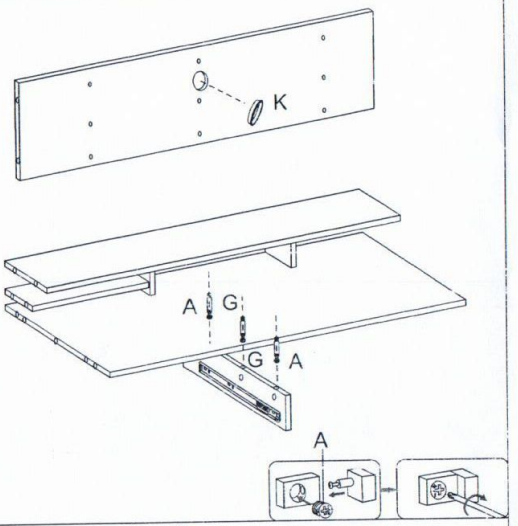

10

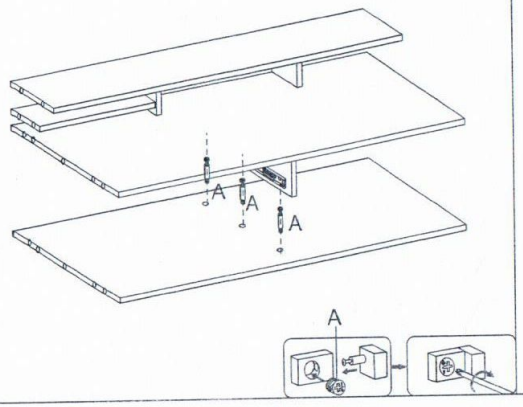

11

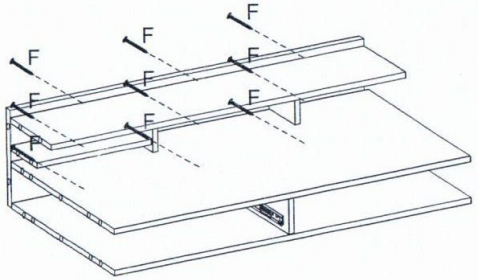
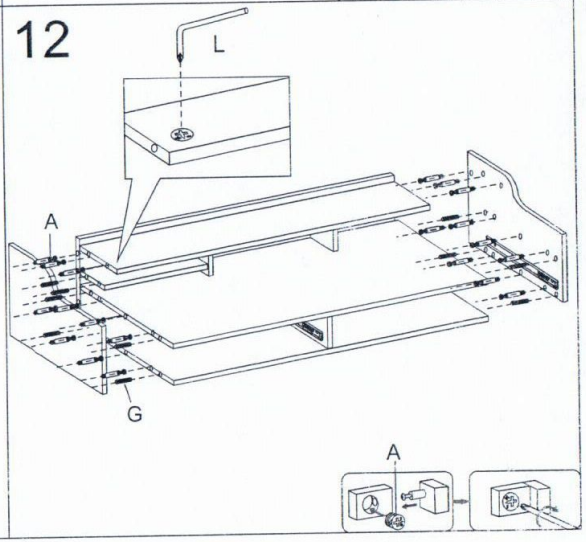
12